ELECTRIC MOTORS

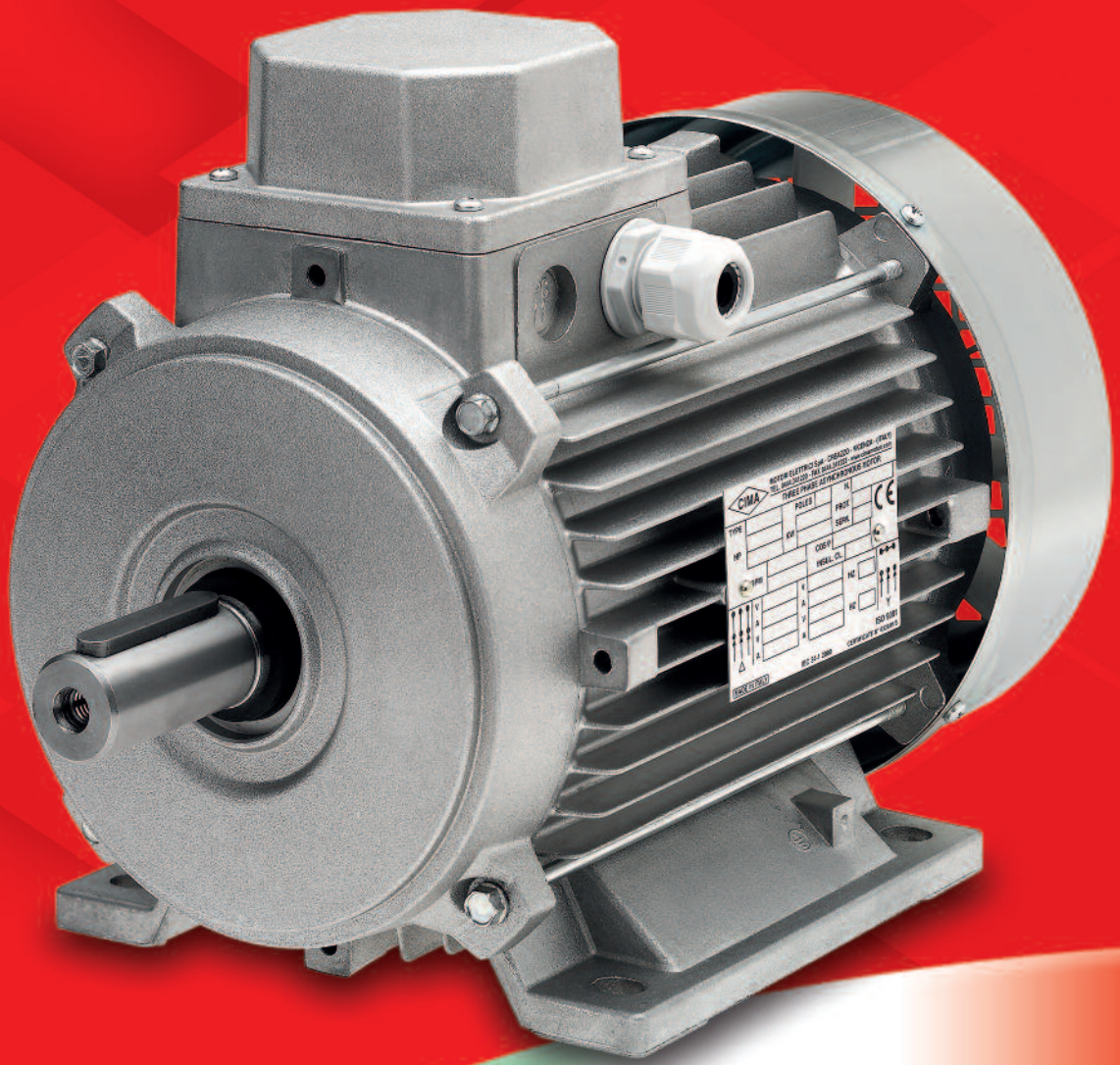

100% Made in Italy

windings and cables dept

mechanical workings dept

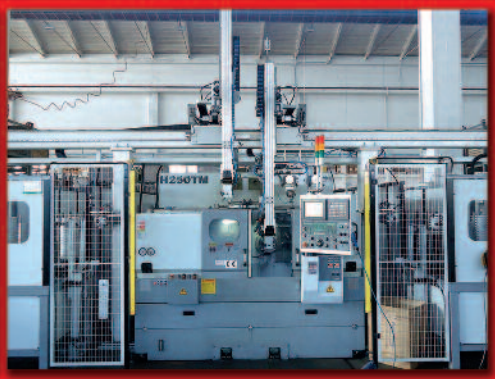

assembly dept

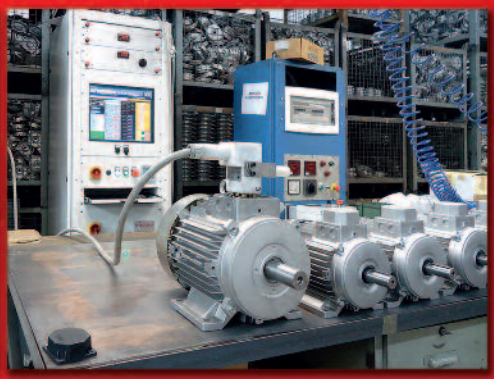

THREE PHASE MOTORS UP TO 40 KW

SINGLE PHASE MOTORS UP TO 11 KW

IE1 IE2 IE3

All manufacturing phases and working checks are regulated by quality system UNI EN ISO 9001:2008

Member of CISQ Federation
RINA
ISO 9001:2008
Sistema Qualità Certificato

CE

100% MADE IN ITALY

CIMA

ELECTRIC MOTORS

www.cimamotori.com

Cima S.p.A Electric motors, is manufacturing single phase, three phase and double polarity asynchronous motors, as well as special motors, since 1977. The motors are totally enclosed, fan cooled, aluminium housing and copper winding. All motors are prepared in insulation class F or H, IP55 normal protection degree, tropicalized, on request till protection IP66, according to main norms IEC 60034 – IEC 60072. Powers and frame sizes are unified (MEC) from frame size 56 up to 200M, or according to customer drawings. All motors are manufactured in Italy in our factory, using modern and advanced technologies. Around 2000 motors are daily produced and tested one by one to supply only high quality motors certified ISO9001:2008. Quality is our first aim.

: two poles

2 POLES Volt 230/50 Hz (3000 rpm)

Frame size IEC	Rated Output kW	Rated Output Hp	n rpm	Tn Torque Nm	In (230V) A	Cosφ	Eff η%	Tstart Tn	Istart In	Tmax Tn	J kgm²	Weight kg
56M	0.09	0.12	2765	0.31	0.9	0.96	43.0	0.87	2.8	3.0	0.000086	2
56M	0.13	0.18	2720	0.43	1.1	0.96	49.0	0.45	2.5	2.4	0.000086	2.5
56M*	0.18	0.25	2773	0.62	1.6	0.92	54.1	0.80	3.2	2.8	0.000116	3.5
63M	0.13	0.18	2780	0.42	1.0	0.99	56.0	0.48	2.5	1.9	0.000122	4.0
63M	0.18	0.25	2680	0.64	1.6	0.98	52.8	0.61	2.2	1.8	0.000142	4.3
63M	0.25	0.35	2733	0.87	2.1	0.97	54.5	0.62	2.6	1.7	0.000172	4.6
63M*	0.37	0.5	2665	1.33	2.8	0.97	58.6	0.47	2.4	1.4	0.000232	5.0
63M*	0.55	0.75	2750	1.92	3.7	0.95	68.0	0.40	3.0	1.5	0.000322	5.2
71M	0.37	0.5	2662	1.33	2.8	0.99	58.2	0.50	2.4	1.3	0.000290	6.3
71M	0.55	0.75	2764	1.90	3.5	0.99	69.3	0.59	3.0	1.4	0.000400	7.2
71M*	0.75	1	2730	2.57	4.9	0.97	67.0	0.51	3.3	1.5	0.000500	8.5
71M*	1.1	1.5	2720	3.51	7.6	0.96	66.0	0.90	3.3	1.4	0.000700	9.3
80M	0.75	1	2770	2.59	5.1	0.88	73.6	0.79	3.2	1.8	0.000857	8.8
80M	1.1	1.5	2662	3.95	7.1	0.96	67.6	0.62	3.1	1.5	0.000987	10.8
80M*	1.5	2	2710	5.28	6.9	0.96	69.6	0.57	3.7	1.9	0.001257	11.9
80M*	1.85	2.5	2721	6.50	12.2	0.94	70.6	0.58	3.5	1.6	0.001517	13.4
90S	1.1	1.5	2750	4.69	7.5	0.96	67.0	0.74	3.3	1.7	0.001375	13.8
90S	1.5	2	2748	5.21	9.2	0.98	72.7	0.60	3.4	1.6	0.001545	14.1
90L	1.85	2.5	2725	6.48	11.6	0.97	71.2	0.55	3.1	1.7	0.001739	14.7
90L	2.2	3	2732	7.68	13.5	0.98	71.7	0.59	3.7	1.7	0.002089	16.5
90L*	2.6	3.5	2760	8.91	15.4	0.97	75.0	0.57	3.6	1.6	0.002269	18.4
100M	2.2	3	2829	7.43	12.9	0.98	75.8	0.67	3.9	1.9	0.003297	20.8
100M	3	4	2797	10.24	17.4	0.98	76.2	0.54	3.5	1.7	0.003897	23.0
112M	4	5.5	2730	14.00	23.2	0.99	75.5	0.53	3.6	1.5	0.005766	29.5
112M*	5.5	7.5	2810	18.76	31.0	0.98	79.0	0.62	3.8	1.6	0.007216	34.5
132S	5.5	7.5	2860	18.36	30.5	0.99	78.8	0.43	3.5	1.5	0.014341	42.2
132S	7.5	10	2870	24.95	41.2	0.99	80.0	0.35	6.3	1.3	0.015401	50.0

: two poles

2 POLES Volt 220/60 Hz (3600 rpm)

Frame size IEC	Rated Output kW	Rated Output Hp	n rpm	Tn Torque Nm	In (230V) A	Cosφ	Eff η%	Tstart Tn	Istart In	Tmax Tn	J kgm²	Weight kg
56M	0.09	0.12	3300	0.27	0.9	0.96	46.0	0.46	2.3	2.9	0.000086	2
56M	0.13	0.18	3350	0.35	1.1	0.96	50.0	0.45	2.4	2.7	0.000086	2.5
56M*	0.18	0.25	3380	0.52	1.6	0.96	52.0	0.43	2.6	2.4	0.000116	3.5
63M	0.13	0.18	3220	0.36	1.0	0.98	55.0	0.48	2.5	2.0	0.000122	4.0
63M	0.18	0.25	3250	0.54	1.5	0.98	55.0	0.45	2.5	2.3	0.000142	4.3
63M	0.25	0.35	3280	0.73	2.5	0.95	51.2	0.75	2.6	2.1	0.000172	4.6
63M*	0.37	0.5	3350	1.05	2.6	0.96	64.0	0.45	3.0	2.2	0.000232	5.0
63M*	0.55	0.75	3380	1.56	3.7	0.96	67.0	0.45	3.0	2.4	0.000322	5.2
71M	0.37	0.5	3350	1.05	2.6	0.97	64.0	0.56	2.8	2.5	0.000290	6.3
71M*	0.55	0.75	3350	1.57	3.7	0.97	67.0	0.55	2.8	2.6	0.000400	7.2
71M*	0.75	1	3350	2.10	4.9	0.97	68.0	0.55	3.0	2.4	0.000500	8.5
71M*	1.1	1.5	3350	3.15	7.4	0.96	68.0	0.60	3.0	1.9	0.000700	9.3
80M	0.75	1	3320	2.12	5.4	0.95	62.0	0.65	2.6	2.0	0.000857	8.8
80M	1.1	1.5	3320	3.17	7.8	0.95	65.0	0.65	2.6	2.2	0.000987	10.8
80M*	1.5	2	3330	4.22	9.9	0.95	68.0	0.65	2.8	1.9	0.001257	11.9
80M*	1.85	2.5	3379	5.23	12.0	0.96	72.8	0.55	4.2	1.6	0.001517	13.4
90S	1.1	1.5	3380	3.12	7.5	0.96	67.0	0.74	3.2	1.8	0.001375	13.8
90S	1.5	2	3350	3.91	9.8	0.96	68.0	0.74	3.3	2.1	0.001545	13.8
90L	1.85	2.5	3350	4.89	12.0	0.96	69.0	0.70	3.3	1.9	0.001739	14.7
90L	2.2	3	3422	6.14	14.0	0.97	73.6	0.63	4.9	2.3	0.002089	16.5
90L*	2.6	3.5	3380	7.34	16.2	0.96	72.0	0.75	3.3	2.2	0.002269	18.4
100M	2.2	3	3403	6.17	13.9	0.99	72.1	0.62	4.4	2.4	0.003297	20.8
100M	3	4	3365	8.51	20.4	0.99	66.7	0.56	3.8	1.5	0.003897	23.0
112M	4	5.5	3386	11.28	24.7	0.99	73.5	0.49	4.2	2.1	0.005766	29.5
112M*	5.5	7.5	3416	15.38	33.7	0.99	74.0	0.45	4.3	2.7	0.007216	34.5
132S	5.5	7.5	3420	15.41	32.2	0.98	76.0	0.36	3.2	2.1	0.014341	42.2
132S	7.5	10	3450	20.37	40.8	0.98	80.0	0.44	3.3	2.0	0.015401	50.0

*POWERS NOT INCLUDED FOR THE UNIFIED SERIES.

WE RESERVE THE RIGHT TO CHANGE THE DATA ALSO WITHOUT NOTICE. Rev. 0-2013

four poles

4 POLES Volt 230/50 Hz (1500 rpm)

Frame size IEC	Rated Output kW	Rated Output Hp	n rpm	Tn Torque Nm	In (230V) A	Cosφ	Eff η%	Tstart Tn	Istart In	Tmax Tn	J kgm²	Weight kg
56M	0.06	0.08	1320	0.44	0.7	0.92	39.0	0.55	2.2	2.3	0.000126	3
56M	0.09	0.12	1320	0.67	1.0	0.93	43.0	0.55	2.3	2.1	0.000176	3.2
56M*	0.13	0.18	1340	0.87	1.3	0.92	46.0	0.55	2.5	2.0	0.000226	3.2
63M	0.09	0.12	1320	0.67	1.0	0.93	43.0	0.55	2.3	1.7	0.000172	4.2
63M	0.13	0.18	1350	0.87	1.1	0.95	50.0	0.67	2.2	1.8	0.000222	4.6
63M	0.18	0.25	1350	1.30	1.6	0.95	53.0	0.63	2.2	1.5	0.000292	4.8
63M*	0.25	0.35	1320	1.77	2.1	0.91	55.0	0.53	2.2	1.5	0.000382	5.1
71M	0.25	0.35	1320	1.56	2.2	0.95	51.0	0.80	2.2	2.2	0.000740	5.7
71M	0.37	0.5	1310	2.68	3.2	0.92	55.0	0.71	2.6	2.1	0.000102	6.6
71M*	0.55	0.75	1320	4.00	4.4	0.94	58.0	0.70	2.8	2.4	0.000138	7.2
80M	0.37	0.5	1340	2.62	3.0	0.97	55.0	0.70	2.4	2.0	0.001447	7.6
80M	0.55	0.75	1340	3.51	4.3	0.95	61.0	0.65	2.6	2.1	0.001907	8.9
80M	0.75	1	1350	4.69	5.5	0.95	64.0	0.65	2.8	1.8	0.002677	9.9
80M*	1.1	1.5	1340	7.85	7.7	0.95	65.0	0.55	3.2	1.7	0.003457	11.2
90S	1.1	1.5	1350	7.81	7.1	0.97	70.0	0.55	3.0	1.9	0.002735	13.7
90L	1.5	2	1330	10.57	9.6	0.98	65.0	0.62	2.3	1.9	0.003185	15.2
90L*	1.85	2.5	1330	13.20	12.3	0.97	67.0	0.62	2.5	1.8	0.004119	17.5
90L*	2.2	3	1300	16.20	14.7	0.97	68.0	0.50	2.7	1.7	0.004429	17.5
100M	2.2	3	1400	15.06	13.0	0.98	75.0	0.53	3.9	1.5	0.006637	22.6
112M	3	4	1390	20.20	17.1	0.99	76.0	0.40	3.3	1.4	0.010536	29.0
112M	4	5.5	1380	28.00	23.8	0.98	75.0	0.48	3.5	2.1	0.013476	32.5
132S	4	5.5	1400	27.60	23.6	0.98	76.0	0.40	3.4	1.9	0.023261	37.0
132S	5.5	7.5	1410	37.50	30.0	0.98	81.0	0.38	3.6	1.7	0.028691	42.0
132M	7.5	10	1420	49.90	39.5	0.99	82.0	0.28	3.5	1.8	0.037889	50.0

four poles

4 POLES Volt 220/60 Hz (1800 rpm)

Frame size IEC	Rated Output kW	Rated Output Hp	n rpm	Tn Torque Nm	In (230V) A	Cosφ	Eff η%	Tstart Tn	Istart In	Tmax Tn	J kgm²	Weight kg
56M	0.06	0.08	1620	0.36	0.7	0.90	41.0	0.55	2.2	1.9	0.000126	3
56M	0.09	0.12	1620	0.54	1.0	0.92	45.0	0.55	2.3	1.7	0.000176	3.2
56M*	0.13	0.18	1640	0.71	1.2	0.92	50.0	0.55	2.4	1.6	0.000226	3.2
63M	0.09	0.12	1620	0.54	0.9	0.92	45.0	0.60	2.2	1.4	0.000172	4.2
63M	0.13	0.18	1650	0.71	1.1	0.94	50.0	0.65	2.2	1.5	0.000222	4.6
63M	0.18	0.25	1650	0.98	1.7	0.94	52.0	0.65	2.2	1.4	0.000292	4.6
63M*	0.25	0.35	1650	1.45	2.0	0.94	56.0	0.60	2.2	1.3	0.000382	5.1
71M	0.25	0.35	1620	1.30	2.1	0.94	54.0	0.70	2.2	1.8	0.000740	5.7
71M	0.37	0.5	1650	1.96	3.0	0.92	58.0	0.70	2.8	1.7	0.000102	6.6
71M*	0.55	0.75	1650	3.20	4.3	0.92	60.0	0.70	2.8	1.8	0.000138	7.2
80M	0.37	0.5	1630	1.96	2.8	0.95	61.0	0.65	2.6	1.6	0.001447	7.6
80M	0.55	0.75	1640	2.93	4.0	0.96	63.0	0.65	2.6	1.7	0.001907	8.9
80M	0.75	1	1650	3.91	5.1	0.96	65.0	0.65	2.8	1.5	0.002677	9.9
80M*	1.1	1.5	1640	6.43	7.7	0.95	66.0	0.65	2.8	1.6	0.003457	11.2
90S	1.1	1.5	1600	5.86	8.1	0.96	62.0	0.65	2.4	1.5	0.002735	13.7
90L	1.5	2	1600	7.81	10.2	0.96	65.0	0.60	2.3	1.5	0.003185	15.2
90L*	1.85	2.5	1630	9.76	12.2	0.97	68.0	0.60	2.5	1.4	0.004119	17.5
90L*	2.2	3	1630	12.63	14.1	0.97	70.0	0.60	2.5	1.3	0.004429	17.5
100M	2.2	3	1650	11.72	13.8	0.97	72.0	0.53	2.6	1.4	0.006637	22.6
112M	3	4	1670	15.62	17.0	0.97	78.0	0.45	3.0	1.1	0.010536	29.0
112M	4	5.5	1670	23.15	23.3	0.97	78.0	0.45	3.0	1.7	0.013476	32.5
132S	4	5.5	1700	22.74	23.9	0.97	76.0	0.40	3.4	1.5	0.023261	37.0
132S	5.5	7.5	1710	30.83	30.5	0.97	81.0	0.36	3.5	1.3	0.028691	42.0
132M	7.5	10	1720	40.87	40.2	0.97	82.0	0.32	3.5	1.4	0.037889	50.0

*POWERS NOT INCLUDED FOR THE UNIFIED SERIES.

WE RESERVE THE RIGHT TO CHANGE THE DATA ALSO WITHOUT NOTICE. Rev. 0-2013

six poles

6 POLES Volt 230/50 Hz (1000 rpm)

Frame size IEC	Rated Output kW	Rated Output Hp	n rpm	Tn Torque Nm	In (230V) A	Cosφ	Eff η%	Tstart/Tn	Istart/In	Tmax/Tn	J kgm²	Weight kg
63M	0.09	0.12	880	1.00	1.2	0.92	38.0	0.40	3.0	1.6	0.000281	4.6
63M	0.13	0.18	880	1.33	1.4	0.92	40.0	0.40	3.0	1.4	0.000342	4.8
71M	0.18	0.25	900	1.97	1.8	0.94	48.0	0.40	3.2	1.5	0.000740	5.7
71M	0.25	0.35	900	2.60	2.2	0.94	53.0	0.40	3.2	1.3	0.000950	6.0
71M*	0.37	0.5	900	3.90	3.0	0.94	56.0	0.40	3.2	1.1	0.001450	8.8
80M	0.37	0.5	900	3.90	3.1	0.94	54.0	0.40	3.2	1.6	0.001907	8.9
80M	0.55	0.75	900	5.85	4.4	0.94	58.0	0.40	3.2	1.4	0.002527	9.9
80M*	0.75	1	900	7.80	5.6	0.94	61.0	0.40	3.4	1.5	0.003147	11.2
90S	0.75	1	900	7.80	5.4	0.94	63.0	0.38	3.4	1.5	0.002575	12
90L	1.1	1.5	900	11.70	7.9	0.94	65.0	0.38	3.6	1.3	0.003359	15.2
90L*	1.5	2	900	15.60	10.2	0.94	67.0	0.38	3.6	1.1	0.004269	17.5
100M	1.5	2	980	15.30	10.0	0.94	68.0	0.38	3.6	1.2	0.004677	18.5
100M*	2.2	3	920	22.90	14.4	0.94	71.0	0.38	3.6	1.3	0.006637	20.5
112M	2.2	3	930	22.70	14.0	0.95	72.0	0.36	3.8	1.2	0.008846	24.0
112M*	3	4	930	30.20	18.0	0.95	75.0	0.36	3.8	1.2	0.011376	29.0
132S	3	4	930	30.20	17.7	0.95	76.0	0.34	3.0	1.3	0.023861	41.0
132M	4	5.5	930	41.60	23.8	0.95	78.0	0.34	3.0	1.2	0.031449	43.0
132M	5.5	7.5	930	56.70	31.2	0.95	81.0	0.34	3.0	1.1	0.041359	50.0

six poles

6 POLES Volt 220/60 Hz (1200 rpm)

Frame size IEC	Rated Output kW	Rated Output Hp	n rpm	Tn Torque Nm	In (230V) A	Cosφ	Eff η%	Tstart/Tn	Istart/In	Tmax/Tn	J kgm²	Weight kg
63M	0.09	0.12	1070	0.82	1.1	0.90	41.0	0.40	3.1	1.5	0.000281	4.6
63M	0.13	0.18	1070	1.09	1.4	0.90	43.0	0.40	3.1	1.3	0.000342	4.8
71M	0.18	0.25	1090	1.61	1.7	0.92	51.0	0.40	3.3	1.6	0.000740	5.7
71M	0.25	0.35	1090	2.15	2.1	0.92	55.0	0.40	3.3	1.2	0.000950	6.0
71M*	0.37	0.5	1090	3.23	3.0	0.92	58.0	0.40	3.3	1.2	0.001450	8.8
80M	0.37	0.5	1090	3.23	3.0	0.92	57.0	0.40	3.3	1.4	0.001907	8.9
80M	0.55	0.75	1090	4.84	4.3	0.92	61.0	0.40	3.3	1.3	0.002527	9.9
80M*	0.75	1	1090	6.45	5.5	0.92	63.0	0.40	3.5	1.4	0.003147	11.2
90S	0.75	1	1090	6.45	5.3	0.92	65.0	0.38	3.5	1.4	0.002575	12
90L	1.1	1.5	1090	9.67	7.8	0.92	67.0	0.38	3.7	1.1	0.003359	15.2
90L*	1.5	2	1090	12.90	10.1	0.92	69.0	0.38	3.7	1.0	0.004269	17.5
100M	1.5	2	1110	12.66	9.9	0.92	70.0	0.38	3.7	1.1	0.004677	18.5
100M*	2.2	3	1110	19.00	14.3	0.92	73.0	0.38	3.7	1.0	0.006637	20.5
112M	2.2	3	1120	18.83	13.8	0.94	74.0	0.36	3.9	1.1	0.008846	24.0
112M*	3	4	1120	25.10	17.7	0.94	77.0	0.36	3.9	1.0	0.011376	29.0
132S	3	4	1120	25.10	17.5	0.94	78.0	0.34	3.2	1.1	0.023861	41.0
132M	4	5.5	1120	34.52	23.4	0.94	80.0	0.34	3.2	1.0	0.031449	43.0
132M	5.5	7.5	1120	47.07	30.8	0.94	83.0	0.34	3.2	0.9	0.041359	50.0

*POWERS NOT INCLUDED FOR THE UNIFIED SERIES.

WE RESERVE THE RIGHT TO CHANGE THE DATA ALSO WITHOUT NOTICE. Rev. 0-2013

2 POLES Volt 400/50-60 Hz (3000 - 3600 rpm) - IE1 Standard Efficiency

Frame size IEC	Rated Output kW	Rated Output Hp	Hz	n rpm	Tn Torque Nm	In (400V) A	Cosφ	Eff η%	Tstart Tn	Istart In	Tmax Tn	J kgm²	Weight kg
56M	0.09	0.12	50	2680	0.33	0.4	0.67	50.0	3.0	3.1	4.0	0.000069	2.5
			60	3240	0.27	0.4	0.70	51.0	2.5	2.7	3.3		
56M	0.13	0.18	50	2740	0.42	0.5	0.62	53.6	3.3	3.5	6.0	0.000082	2.8
			60	3260	0.35	0.4	0.71	57.0	2.8	2.9	5.0		
56M*	0.18	0.25	50	2771	0.62	0.8	0.53	58.3	4.2	3.3	5.4	0.000111	3.2
			60	3325	0.53	0.7	0.62	60.0	3.5	2.7	4.5		
63M	0.18	0.25	50	2657	0.64	0.7	0.71	58.3	2.5	3.0	4.1	0.000139	3.8
			60	3149	0.55	0.7	0.79	59.0	2.1	2.5	3.4		
63M	0.25	0.35	50	2630	0.91	0.9	0.74	61.9	2.6	3.2	3.0	0.000175	4.0
			60	3160	0.76	0.8	0.79	73.0	2.2	2.2	2.5		
63M*	0.37	0.5	50	2760	1.29	1.3	0.66	65.8	3.3	3.6	3.7	0.000229	4.5
			60	3315	1.06	1.1	0.75	67.0	2.7	3.0	3.1		
63M*	0.55	0.75	50	2760	1.90	1.7	0.69	69.4	3.6	4.1	3.6	0.000303	5.0
			60	3362	1.56	1.4	0.77	70.0	3.0	3.4	3.0		
71M	0.37	0.5	50	2770	1.27	1.1	0.75	65.8	2.5	3.8	2.7	0.000294	5.5
			60	3330	1.06	1.0	0.81	66.0	2.1	3.0	2.2		
71M	0.55	0.75	50	2770	1.89	1.4	0.76	69.4	2.5	4.1	2.4	0.000362	6.0
			60	3330	1.58	1.3	0.82	70.0	2.1	3.4	2.0		
71M*	0.75	1	50	2740	2.57	2.0	0.76	72.1	3.7	4.5	3.4	0.000567	7.0
			60	3280	2.15	1.9	0.80	77.0	3.1	3.7	2.9		
71M*	1.1	1.5	50	2790	3.80	2.9	0.76	75.0	3.8	5.3	3.6	0.000636	8.5
			60	3350	3.14	2.5	0.82	78.5	3.1	4.4	3.0		
80M	0.75	1	50	2825	2.54	1.9	0.78	72.1	2.5	4.6	2.6	0.000721	8.0
			60	3390	2.11	1.7	0.84	77.0	2.1	3.8	2.2		
80M	1.1	1.5	50	2830	3.72	2.6	0.79	75.0	2.5	4.9	2.6	0.000854	10.0
			60	3385	3.10	2.4	0.86	78.5	2.1	4.1	2.2		
80M*	1.5	2	50	2840	5.04	3.5	0.78	77.2	3.3	6.0	3.5	0.001199	10.5
			60	3410	4.20	3.1	0.84	81.0	2.8	5.0	2.9		
80M*	2.2	3	50	2805	7.49	5.1	0.82	79.7	3.6	6.1	3.2	0.001385	13.0
			60	3370	6.23	4.4	0.87	81.5	3.0	5.1	3.0		
90S	1.5	2	50	2775	5.16	3.4	0.85	77.2	2.4	4.7	2.4	0.001194	12.0
			60	3340	4.28	3.2	0.88	81.0	2.0	3.9	2.0		
90L	2.2	3	50	2805	7.49	4.8	0.84	79.7	2.7	5.4	2.8	0.001648	14.5
			60	3370	6.23	4.2	0.88	81.5	2.3	4.5	2.4		
90L*	3	4	50	2828	10.13	6.6	0.81	81.5	3.4	6.0	3.4	0.002091	16.5
			60	3395	8.44	6.0	0.86	84.5	2.8	5.0	2.8		
100M	3	4	50	2848	10.10	6.5	0.82	81.5	2.7	5.8	2.9	0.002991	19.5
			60	3426	8.37	6.1	0.88	84.5	2.2	4.8	2.4		
100M*	4	5.5	50	2866	13.32	8.5	0.83	83.1	2.9	6.4	2.9	0.003898	22.0
			60	3439	11.19	8.3	0.89	84.5	2.4	5.3	2.4		
112M	4	5.5	50	2836	13.47	8.2	0.87	83.1	2.6	6.3	2.8	0.004554	24.0
			60	3423	11.16	8.1	0.90	84.5	2.2	5.2	2.3		
112M*	5.5	7.5	50	2871	18.30	11.3	0.84	84.7	3.6	7.2	3.7	0.005763	29.0
			60	3418	15.37	10.8	0.92	86.0	3.1	6.3	3.2		
112M*	7.5	10	50	2871	24.95	15.0	0.85	86.0	3.8	7.5	3.7	0.007213	34.0
			60	3451	20.75	14.0	0.91	87.5	3.1	6.2	3.1		
132S	5.5	7.5	50	2881	18.32	18.8	0.85	84.7	2.1	5.1	3.0	0.011139	36.0
			60	3478	15.10	11.9	0.87	86.0	1.7	4.2	2.5		
132S	7.5	10	50	2911	24.60	14.5	0.86	86.0	2.6	7.1	3.7	0.014338	42.5
			60	3497	20.48	13.6	0.89	87.5	2.2	5.9	3.1		
132M*	9.2	12.5	50	2908	30.21	18.1	0.87	86.9	2.8	6.6	3.1	0.016619	47.0
			60	3490	25.17	15.0	0.91	87.5	2.3	5.5	2.6		
132M*	11	15	50	2915	36.04	22.1	0.86	87.6	3.4	8.0	4.0	0.019818	53.5
			60	3500	30.00	21.1	0.90	87.5	2.8	6.6	3.3		
132M*	15	20	50	2916	49.12	28.3	0.86	88.7	3.3	5.8	3.1	0.024084	62.0
			60	3504	40.88	26.6	0.90	88.5	2.7	4.8	2.6		
160M	11	15	50	2910	36.20	21.3	0.86	87.6	2.8	6.7	3.0	0.030080	75.0
			60	3500	30.10	20.4	0.90	87.5	2.3	6.0	2.5		
160M	15	20	50	2910	48.10	27.4	0.87	88.7	2.9	7.0	3.2	0.037453	82.0
			60	3500	40.00	26.8	0.90	88.5	2.4	6.3	2.7		
160L	18.5	25	50	2915	60.30	34.5	0.88	89.3	2.9	6.4	3.2	0.045254	89.5
			60	3500	50.20	32.7	0.91	89.5	2.4	5.8	2.7		
160L*	22	30	50	2920	72.10	40.2	0.88	89.9	3.0	7.4	3.4	0.052626	94.0
			60	3510	60.10	39.4	0.91	89.5	2.5	6.7	2.8		
160L*	26	35	50	2930	84.00	46.4	0.88	90.3	3.0	7.5	3.2	0.059999	104.0
			60	3520	69.90	45.4	0.91	90.2	2.5	6.8	2.7		
160L*	30	40	50	2930	96.00	53.0	0.88	90.7	3.2	7.5	3.5	0.067372	111.0
			60	3520	79.90	51.9	0.91	90.2	2.7	6.8	2.9		
180M	22	30	50	2930	72.00	39.4	0.90	89.9	2.6	7.0	2.9	0.062596	110.0
			60	3520	59.90	38.9	0.92	89.5	2.2	6.3	2.4		
180L*	30	40	50	2935	95.80	51.9	0.90	90.7	2.8	7.3	3.0	0.077997	123.0
			60	3520	79.90	51.3	0.92	90.2	2.3	6.5	2.5		
180L*	37	50	50	2940	119.50	64.2	0.90	91.2	2.8	7.5	3.0	0.092861	139.0
			60	3530	99.60	63.5	0.92	91.5	2.3	6.7	2.5		
180L*	45	60	50	2945	143.20	77.0	0.90	91.7	3.0	7.5	3.3	0.107393	152.0
			60	3530	119.50	76.1	0.92	91.7	2.5	6.7	2.7		
200M	30	40	50	2935	95.80	51.9	0.90	90.7	2.8	7.3	3.0	0.116000	123.0
			60	3520	79.90	51.3	0.92	90.2	2.3	6.5	2.5		
200M	37	50	50	2940	119.50	64.2	0.90	91.2	2.8	7.5	3.1	0.196000	139.0
			60	3530	99.60	63.5	0.92	91.5	2.3	6.7	2.6		
200M*	45	60	50	2945	143.20	77.0	0.90	91.7	3.0	7.5	3.2	0.230000	152.0
			60	3530	119.50	76.1	0.92	91.7	2.5	6.7	2.7		

*POWERS NOT INCLUDED FOR THE UNIFIED SERIES.

WE RESERVE THE RIGHT TO CHANGE THE DATA ALSO WITHOUT NOTICE. Rev. 0-2013

four poles

4 POLES Volt 400/50-60 Hz (1500 - 1800 rpm) - IE1 Standard Efficiency

Frame size IEC	Rated Output kW	Rated Output Hp	Hz	n rpm	Tn Torque Nm	In (400V) A	Cosφ	Eff η%	Tstart Tn	Istart In	Tmax Tn	J kgm²	Weight kg
56M	0.06	0.09	50	1320	0.44	0.4	0.55	44.5	3.0	2.4	3.1	0.000126	2.8
			60	1600	0.36	0.3	0.60	45.0	2.5	2.2	2.6		
56M	0.09	0.12	50	1341	0.64	0.6	0.55	50.0	3.3	2.7	3.7	0.000176	3.0
			60	1617	0.53	0.5	0.60	51.0	2.7	2.2	3.1		
56M*	0.13	0.18	50	1400	0.86	0.7	0.49	53.6	4.3	3.0	4.6	0.000226	3.2
			60	1690	0.68	0.6	0.52	54.0	3.6	2.5	3.8		
63M	0.09	0.12	50	1320	0.67	0.4	0.74	50.0	2.3	2.7	2.5	0.000172	3.0
			60	1600	0.55	0.3	0.79	51.0	1.9	2.5	2.1		
63M	0.13	0.18	50	1347	0.85	0.6	0.64	53.6	2.4	2.9	3.2	0.000222	3.5
			60	1617	0.71	0.5	0.67	54.0	2.0	2.4	2.7		
63M	0.18	0.25	50	1334	1.28	0.8	0.62	58.3	2.9	3.1	2.8	0.000242	4.0
			60	1610	1.07	1.0	0.68	59.0	2.4	2.6	2.3		
63M*	0.22	0.30	50	1356	1.57	0.9	0.66	60.5	2.5	3.0	2.6	0.000292	4.5
			60	1630	1.30	0.8	0.68	61.0	2.1	2.5	2.2		
63M*	0.25	0.35	50	1356	1.76	1.0	0.61	61.9	2.6	3.0	2.7	0.000340	5.0
			60	1630	1.46	0.9	0.65	62.5	2.2	2.5	2.3		
71M	0.25	0.35	50	1400	1.67	0.8	0.73	61.9	2.3	3.5	2.5	0.000590	5.0
			60	1660	1.41	0.7	0.79	62.5	1.9	3.1	2.1		
71M	0.37	0.50	50	1378	2.56	1.1	0.76	65.8	2.2	3.7	2.3	0.000810	5.5
			60	1660	2.13	0.9	0.79	68.0	1.8	3.1	1.9		
71M*	0.55	0.75	50	1360	3.86	1.6	0.74	69.4	2.7	4.0	2.6	0.000950	7.5
			60	1630	3.22	1.4	0.81	70.0	2.2	3.3	2.2		
71M*	0.75	1	50	1365	5.25	2.1	0.74	72.1	2.8	4.2	2.8	0.001240	8.0
			60	1640	4.37	1.8	0.79	78.0	2.3	3.5	2.3		
80M	0.55	0.75	50	1360	3.86	1.6	0.74	69.4	2.5	3.7	2.6	0.001590	8.0
			60	1632	3.22	1.4	0.79	70.0	2.1	3.1	2.2		
80M	0.75	1	50	1395	5.13	1.9	0.79	72.1	2.5	4.4	2.5	0.001900	9.0
			60	1678	4.27	1.6	0.85	78.0	2.1	3.7	2.1		
80M*	1.1	1.5	50	1390	7.56	2.8	0.78	75.0	2.6	4.4	2.5	0.002680	11.0
			60	1670	6.29	2.6	0.84	79.0	2.2	3.7	2.1		
80M*	1.5	2	50	1385	10.34	3.8	0.76	77.2	3.4	5.3	3.4	0.003460	12.0
			60	1670	8.58	3.3	0.83	81.5	2.8	4.4	2.8		
90S	1.1	1.5	50	1400	7.50	2.8	0.78	75.0	2.3	4.4	2.6	0.002120	12.5
			60	1680	6.25	2.5	0.83	79.0	1.9	3.7	2.2		
90L	1.5	2	50	1406	10.18	3.5	0.79	77.2	2.4	4.8	2.6	0.002800	14.5
			60	1684	8.51	3.3	0.85	81.5	2.0	4.0	2.2		
90L*	1.85	2.5	50	1390	12.64	4.3	0.79	78.6	2.6	4.5	2.8	0.003200	16.5
			60	1670	10.60	4.0	0.84	83.0	1.7	4.0	2.3		
90L*	2.2	3	50	1390	15.10	5.4	0.73	79.7	2.8	5.0	2.8	0.003820	17.5
			60	1680	12.50	4.8	0.83	83.0	2.3	4.5	2.3		
100M	2.2	3	50	1405	14.95	5.3	0.78	79.7	2.5	4.5	2.5	0.004670	18.5
			60	1690	12.43	4.9	0.82	83.0	2.1	3.7	2.1		
100M	3	4	50	1400	20.46	6.9	0.80	81.5	2.3	4.6	2.5	0.006150	20.5
			60	1685	17.00	6.3	0.85	85.0	1.9	3.8	2.1		
100M*	4	5.5	50	1400	27.50	9.3	0.80	83.1	2.5	4.6	2.6	0.007620	27.5
			60	1700	22.80	8.4	0.84	85.0	2.1	4.1	2.2		
112M	4	5.5	50	1423	26.84	9.0	0.79	83.1	2.7	5.3	2.8	0.010000	29.0
			60	1708	22.36	8.3	0.85	85.0	2.2	4.4	2.3		
112M*	5.5	7.5	50	1421	36.96	11.0	0.78	84.7	2.3	5.0	2.5	0.012200	32.0
			60	1705	30.80	9.6	0.84	87.0	1.9	4.2	2.1		
132S	5.5	7.5	50	1430	36.73	11.8	0.82	84.7	2.1	4.3	2.0	0.023200	41.0
			60	1720	30.54	11.0	0.84	87.0	1.7	3.6	1.7		
132M	7.5	10	50	1435	49.90	15.1	0.82	86.0	2.5	5.4	2.5	0.028800	49.0
			60	1722	41.59	14.9	0.86	87.5	2.1	4.5	2.1		
132M*	9.2	12.5	50	1448	60.67	19.4	0.80	86.9	3.0	6.7	2.4	0.037800	60.0
			60	1742	50.43	17.7	0.84	87.5	2.5	5.6	2.0		
132M*	11	15	50	1430	73.46	23.0	0.83	87.6	2.4	5.4	2.4	0.041500	64.0
			60	1720	61.07	21.8	0.86	88.5	2.0	4.5	2.0		
160M	11	15	50	1455	72.19	22.4	0.82	87.6	1.8	4.4	2.0	0.059700	78.0
			60	1740	60.37	21.8	0.84	88.5	1.5	3.7	1.7		
160L	15	20	50	1451	98.72	27.8	0.84	88.7	2.1	5.1	2.2	0.077200	91.5
			60	1738	82.42	26.9	0.86	89.5	1.7	4.2	1.8		
160L*	18.5	25	50	1455	120.80	35.1	0.85	89.3	2.8	6.4	2.8	0.094200	104.0
			60	1750	100.40	34.3	0.87	90.5	2.3	5.8	2.3		
160L*	22	30	50	1460	144.40	41.7	0.85	89.9	2.8	6.5	2.8	0.109400	115.0
			60	1750	120.50	40.7	0.87	91.0	2.3	5.9	2.3		
180M	18.5	25	50	1453	121.58	37.0	0.82	89.3	1.9	4.4	1.9	0.121900	119.0
			60	1744	101.30	35.2	0.85	90.5	1.6	3.6	1.6		
180L	22	30	50	1460	144.00	42.3	0.82	89.9	2.1	4.8	1.9	0.144200	132.0
			60	1752	120.00	40.2	0.85	91.0	1.7	4.0	1.6		
180L*	26	35	50	1460	168.50	47.5	0.86	90.3	2.8	6.6	2.8	0.169100	146.0
			60	1750	140.60	46.4	0.88	91.7	2.3	6.0	2.3		
180L*	30	40	50	1480	193.57	57.5	0.83	90.7	2.7	6.7	2.6	0.193900	159.0
			60	1770	161.85	55.0	0.86	91.7	2.2	5.7	2.2		
200M	26	35	50	1460	168.50	47.5	0.86	90.3	2.8	6.6	2.9	0.169100	146.0
			60	1750	140.60	46.4	0.88	91.7	2.3	6.0	2.4		
200M	30	40	50	1480	193.57	57.5	0.83	90.7	2.7	6.7	2.6	0.193900	159.0
			60	1770	161.85	55.0	0.86	91.7	2.2	5.7	2.2		

*POWERS NOT INCLUDED FOR THE UNIFIED SERIES.

WE RESERVE THE RIGHT TO CHANGE THE DATA ALSO WITHOUT NOTICE. Rev. 0-2013

six poles

6 POLES Volt 400/50-60 Hz (1000 - 1200 rpm) - IE1 Standard Efficiency

Frame size IEC	Rated Output kW	Rated Output Hp	Hz	n rpm	Tn Torque Nm	In (400V) A	Cosφ	Eff η%	Tstart Tn	Istart In	Tmax Tn	J kgm²	Weight kg
63M	0.09	0.12	50	744	1.15	0.6	0.70	50.1	1.4	1.7	1.6	0.000272	4
			60	890	0.97	0.6	0.71	52.0	1.2	1.4	1.3		
63M	0.13	0.18	50	843	1.36	0.8	0.59	53.2	1.9	1.8	2.2	0.000331	5
			60	1000	1.15	0.7	0.62	54.0	1.6	1.5	1.8		
71M	0.18	0.25	50	882	1.95	0.8	0.68	57.3	2.1	2.5	2.1	0.000810	5.5
			60	1060	1.62	0.8	0.70	58.0	1.7	2.1	1.7		
71M	0.25	0.35	50	905	2.64	1.1	0.64	60.5	2.1	2.8	2.2	0.001090	7.5
			60	1090	2.19	0.9	0.67	62.0	1.7	2.3	1.8		
71M*	0.37	0.50	50	885	4.00	1.2	0.68	64.1	1.8	2.6	1.9	0.001240	8
			60	1062	3.33	1.1	0.70	65.0	1.5	2.2	1.6		
80M	0.37	0.5	50	890	3.97	1.2	0.75	64.1	1.9	3.0	2.1	0.001590	8.2
			60	1070	3.30	1.1	0.76	65.0	1.6	2.5	1.7		
80M	0.55	0.75	50	885	5.93	1.8	0.70	67.5	2.1	3.1	2.2	0.002210	9.2
			60	1064	4.94	1.6	0.72	68.0	1.7	2.6	1.8		
80M*	0.75	1	50	926	7.73	2.2	0.70	70.0	2.7	4.1	2.8	0.003140	11.5
			60	1112	6.44	2.0	0.75	73.0	2.2	3.4	2.3		
90S	0.75	1	50	930	7.70	2.5	0.67	70.0	2.1	3.0	2.2	0.002570	13
			60	1115	6.42	2.3	0.70	73.0	1.7	2.5	1.8		
90L	1.1	1.5	50	922	11.39	3.2	0.68	72.9	2.5	3.9	2.6	0.003820	15
			60	1108	9.48	2.8	0.75	75.0	2.1	3.2	2.2		
90L*	1.50	2	50	920	15.57	4.2	0.70	75.2	2.2	3.6	2.3	0.004110	17
			60	1105	12.96	3.9	0.74	77.0	1.8	3.0	1.9		
100M	1.5	2	50	924	15.50	4.4	0.69	75.2	2.2	3.6	2.3	0.006140	19.0
			60	1110	12.90	4.0	0.73	77.1	1.8	3.0	1.9		
100M*	2.2	3	50	905	23.20	6.1	0.72	77.7	1.9	3.4	2.1	0.007130	20.5
			60	1090	19.27	5.5	0.76	78.5	1.6	2.8	1.7		
112M	2.2	3	50	928	22.64	5.9	0.72	77.7	2.1	3.9	2.3	0.010530	24
			60	1110	18.92	5.5	0.74	78.5	1.7	3.2	1.9		
112M*	3	4	50	948	30.22	7.5	0.72	79.7	1.9	3.0	2.1	0.013376	28
			60	1140	25.13	6.9	0.75	83.5	1.6	2.5	1.7		
132S	3	4	50	955	30.00	7.8	0.73	79.7	2.1	3.8	2.3	0.028820	41
			60	1145	25.00	7.2	0.76	83.5	1.7	3.2	1.9		
132M	4	5.5	50	947	40.33	9.2	0.79	81.4	1.6	4.5	2.3	0.031450	49
			60	1133	33.71	8.5	0.84	83.5	1.3	3.7	1.9		
132M	5.5	7.5	50	953	55.11	12.5	0.77	83.1	2.1	5.0	2.5	0.041360	60
			60	1145	45.87	11.6	0.79	85.0	1.7	4.2	2.1		
132M*	7.5	10	50	960	74.60	15.7	0.80	84.7	1.9	4.5	2.1	0.043840	90
			60	1152	62.17	14.6	0.83	86.0	1.6	3.7	1.7		
160M	7.5	10	50	970	73.83	16.6	0.76	84.7	1.8	4.6	2.0	0.089400	94
			60	1161	61.69	15.9	0.82	86.0	1.5	3.8	1.7		
160L	11	15	50	972	108.07	22.9	0.80	86.4	1.9	4.7	2.1	0.137200	105
			60	1164	90.20	21.8	0.82	89.0	1.6	3.9	1.7		
160L*	15	20	50	974	147.06	31.2	0.79	87.7	2.0	4.5	2.2	0.148300	118
			60	1165	122.95	29.9	0.81	89.5	1.7	3.7	1.8		
180L	15	20	50	975	146.91	32.1	0.77	87.7	2.1	4.4	2.4	0.148700	130
			60	1170	122.43	31.2	0.79	89.5	1.7	3.7	2.0		
180L*	18.5	25	50	978	180.64	37.2	0.81	88.6	2.2	4.6	2.4	0.164400	142
			60	1169	151.12	35.7	0.83	90.2	1.8	3.8	2.0		
180L*	22	30	50	976	215.25	42.4	0.84	89.2	2.3	4.5	2.5	0.180100	150
			60	1170	179.56	40.6	0.86	91.0	1.9	3.7	2.1		

*POWERS NOT INCLUDED FOR THE UNIFIED SERIES.

WE RESERVE THE RIGHT TO CHANGE THE DATA ALSO WITHOUT NOTICE. Rev. 0-2013

two poles

2 POLES Volt 400/50 Hz (3000 rpm) - IE2 High Efficiency

Frame size IEC	Rated Output kW	Rated Output Hp	n rpm	Tn Torque Nm	In (400V) A	Eff η 100%	Eff η 75%	Eff η 50%	Cosφ	Tstart Tn	Istart In	Tmax Tn	J kgm²	Weight kg
71M*	0.75	1	2787	2.6	1.8	77.4	78.5	76.6	0.79	3.5	5.6	3.6	0.0005	7.5
80M	0.75	1	2847	2.5	1.7	77.4	79.0	76.8	0.79	2.8	5.3	2.8	0.0008	8.5
80M	1.1	1.5	2864	3.7	2.4	79.6	79.8	77.7	0.81	3.4	6.9	3.5	0.0010	10.2
90S	1.5	2	2867	5.0	3.2	81.3	80.7	80.5	0.84	3.2	7.0	3.3	0.0015	13.0
90L	2.2	3	2865	7.3	4.5	83.2	83.1	82.2	0.86	3.8	8.1	3.9	0.0021	16.5
90L*	3	4	2890	9.9	6.0	84.6	84.7	83.1	0.85	3.7	7.8	3.8	0.0023	19.0
100M	3	4	2895	9.9	6.2	84.6	84.9	83.5	0.83	3.2	7.6	3.5	0.0036	21.0
100M*	4	5.5	2900	13.2	8.0	85.8	85.6	83.1	0.84	3.4	7.5	3.7	0.0039	23.0
112M	4	5.5	2905	13.2	7.8	85.8	85.7	83.9	0.86	3.9	8.9	4.0	0.0058	27.0
112M*	5.5	7.5	2916	18.1	10.9	87.0	87.1	85.2	0.84	2.2	9.8	4.5	0.0074	32.5
132S	5.5	7.5	2915	18.1	11.3	87.0	87.2	86.7	0.81	3.1	7.1	3.3	0.0133	41.0
132S	7.5	10	2935	24.4	15.3	88.1	87.8	86.5	0.81	3.7	8	3.8	0.0175	45.0
132M*	11	15	2944	35.7	21.0	89.4	89.5	88.0	0.86	3.8	7.5	4.0	0.0227	61.0
160M	11	15	2934	35.8	21.5	89.4	89.3	88.2	0.86	3.7	7	4.0	0.0338	76.0
160M	15	20	2942	48.7	28.0	90.3	90.4	89.5	0.87	3	7.2	3.3	0.0424	88.0
160L	18.5	25	2942	60.0	34.0	90.9	91.0	90.2	0.88	2.8	7.2	3.1	0.0514	92.0
180M	22	30	2948	71.3	40.0	91.3	91.5	90.6	0.88	2.6	7.1	2.9	0.0663	124.0
180L	30	40	2950	97.1	52.0	92.0	92.1	91.0	0.89	2.2	7.0	2.8	0.0836	136.0
180L	37	50	2945	120.0	64.0	92.5	92.6	91.4	0.9	2	7.3	2.6	0.1003	146.0

four poles

4 POLES Volt 400/50 Hz (1500 rpm) - IE2 High Efficiency

Frame size IEC	Rated Output kW	Rated Output Hp	n rpm	Tn Torque Nm	In (400V) A	Eff η 100%	Eff η 75%	Eff η 50%	Cosφ	Tstart Tn	Istart In	Tmax Tn	J kgm²	Weight kg
80M	0.75	1	1436	5.0	1.8	79.6	78.8	77.6	0.76	3.6	6.7	3.6	0.0032	12.5
90S	1.1	1.5	1430	7.4	2.6	81.4	81.7	80.5	0.73	3.0	5.4	3.1	0.0030	13.5
90L	1.5	2	1427	10.0	3.4	82.8	82.1	81.0	0.77	2.9	5.8	3.1	0.0038	17.0
100M	2.2	3	1433	14.7	4.8	84.3	84.4	83.5	0.78	2.8	5.7	2.9	0.0062	21.3
100M	3	4	1433	20.0	6.7	85.5	86.1	84.7	0.77	2.9	6	3.3	0.0072	26.0
112M	4	5.5	1432	26.7	8.5	86.6	86.7	86.1	0.79	2.7	5.9	3.0	0.0122	31.0
132S	5.5	7.5	1455	36.1	11.7	87.7	87.5	86.8	0.78	2.9	5.8	3.0	0.0269	47.0
132M	7.5	10	1460	49.0	16.4	88.7	88.8	88.0	0.76	3.0	5.9	3.1	0.0343	55.0
160M	11	15	1468	71.6	22.1	89.8	90.0	89.6	0.80	2.9	6	3.0	0.0636	88.0
160L	15	20	1470	97.4	29.8	90.6	90.4	90.0	0.80	2.7	6	2.9	0.0829	106.0
180M	18.5	25	1472	120.0	36.1	91.2	91.0	89.8	0.81	2.5	6	2.6	0.1437	136.0
180L	22	30	1465	143.4	40.0	91.6	91.9	91.5	0.87	2.3	6	2.4	0.1690	152.0
180L	30	40	1470	194.9	54.6	92.3	92.5	92.0	0.86	2.4	5.9	2.5	0.2188	170.0

six poles

6 POLES Volt 400/50 Hz (1000 rpm) - IE2 High Efficiency

Frame size IEC	Rated Output kW	Rated Output Hp	n rpm	Tn Torque Nm	In (400V) A	Eff η 100%	Eff η 75%	Eff η 50%	Cosφ	Tstart Tn	Istart In	Tmax Tn	J kgm²	Weight kg
90S	0.75	1	925	7.7	2.2	75.9	74.3	72.8	0.66	1.8	3.9	2.5	0.0041	13.0
90L	1.1	1.5	932	11.3	3.1	78.1	75.7	72.2	0.65	2.4	3.6	2.4	0.0061	17.0
100M	1.5	2	942	15.2	4.0	79.8	78.0	73.0	0.67	2.3	3.8	2.5	0.0000	19.5
112M	2.2	3	950	22.1	5.6	81.8	81.9	78.3	0.68	2.4	4.1	2.6	0.0114	28.0
132S	3	4	955	30.0	7.2	83.3	83.0	81.0	0.72	2.3	4.3	2.5	0.0251	40.0
132M	4	5.5	953	40.0	9.6	84.6	84.5	82.5	0.71	2.4	5.0	2.8	0.0339	48.0
132M	5.5	7.5	955	55.0	12.9	86.0	85.8	84.4	0.71	2.6	5.5	2.9	0.0452	58.0
160M	7.5	10	970	73.8	16.2	87.2	87.1	86.0	0.76	2.6	4.6	3.0	0.0894	90.0
160L	11	15	970	108.3	23.2	88.7	88.5	87.3	0.77	2.7	4.7	3.0	0.1316	115.0
180L	15	20	975	146.9	31.1	89.7	89.3	88.0	0.78	2.7	4.4	3.0	0.1801	140.0
180L	18.5	25	978	180.6	35.1	90.4	90.4	89.2	0.84	2.6	4.6	2.8	0.1879	152.0
180L	22	30	980	214.4	41.5	90.9	90.9	89.8	0.84	2.7	4.5	2.9	0.1958	180.0

*POWERS NOT INCLUDED FOR THE UNIFIED SERIES.

WE RESERVE THE RIGHT TO CHANGE THE DATA ALSO WITHOUT NOTICE. Rev. 0-2013

two poles

2 POLES Volt 400/50 Hz (3000 rpm) - IE3 Premium Efficiency

Frame size IEC	Rated Output kW	Rated Output Hp	n rpm	Tn Torque Nm	In (400V) A	Eff η 100%	Eff η 75%	Eff η 50%	Cosφ	Tstart/Tn	Istart/In	Tmax/Tn	J kgm²	Weight kg
80M	0.75	1	2905	2.5	1.8	80.7	80.1	78.2	0.77	4.7	5.6	7.8	0.0006	7.5
80M	1.1	1.5	2900	3.6	2.5	82.7	82.5	79.1	0.77	5	6.7	5.2	0.0008	11.5
90S	1.5	2	2895	5.0	3.7	84.2	84.6	83.2	0.78	5.0	7.0	5.1	0.0018	14.5
90L	2.2	3	2900	7.2	4.6	86.2	86.2	84.3	0.79	4.9	7.8	4.6	0.0024	19.5
100M	3	4	2920	9.8	6.7	87.4	87.1	85.1	0.75	4.1	7.6	4.5	0.0040	21.3
112M	4	5.5	2920	13.1	8.2	88.4	88.0	86.0	0.81	4.8	8	5.1	0.0065	28.0
132S	5.5	7.5	2925	18.0	10.3	89.2	88.2	85.7	0.86	4.3	8.2	4.4	0.0180	42.0
132S	7.5	10	2927	24.5	14.6	90.1	89.6	88.0	0.85	4.2	8.5	4.4	0.0190	45.0
160M	11	15	2930	35.9	19.8	91.2	90.7	90.0	0.87	4	8.7	4.2	0.0350	74.0
160M	15	20	2925	49.0	27.0	91.9	91.2	91.0	0.88	4.8	9	5.0	0.0450	89.0
160L	18.5	25	2930	60.3	33.8	92.4	92.7	91.5	0.88	5	8	5.2	0.0540	106.0
180M	22	30	2936	71.6	40.0	92.7	93.0	92.2	0.87	5.2	8.3	5.2	0.0690	130.0
180L	30	40	2940	97.4	51.6	93.3	93.5	92.4	0.9	2.8	7.0	3.0	0.0860	140.0
180L	37	50	2940	120.2	62.5	93.7	93.6	92.8	0.91	3	7	3.2	0.1350	162.0

four poles

4 POLES Volt 400/50 Hz (1500 rpm) - IE3 Premium Efficiency

Frame size IEC	Rated Output kW	Rated Output Hp	n rpm	Tn Torque Nm	In (400V) A	Eff η 100%	Eff η 75%	Eff η 50%	Cosφ	Tstart/Tn	Istart/In	Tmax/Tn	J kgm²	Weight kg
80M	0.75	1	1445	5.0	1.7	82.5	81.6	80.8	0.77	2.8	5.7	3.2	0.0035	12.0
90S	1.1	1.5	1435	7.3	2.6	84.1	84.2	83.2	0.74	3.0	5.5	3.3	0.0037	14.5
90L	1.5	2	1430	10.0	3.3	85.3	85.2	84.3	0.76	3.1	6.0	3.4	0.0041	18.0
100M	2.2	3	1443	14.6	4.8	86.7	86.4	83.3	0.77	2.8	5.6	3.0	0.0064	23.0
112M	3	4	1440	19.9	6.3	87.7	87.2	85.0	0.78	2.8	5.4	3.1	0.0200	28.0
132S	4	5.5	1445	26.4	8.2	88.6	88.3	87.2	0.80	2.4	5.3	2.5	0.0210	41.0
132S	5.5	7.5	1450	36.2	11.4	89.6	89.8	89.2	0.78	2.5	5.8	2.6	0.0280	45.0
132M	7.5	10	1462	49.0	15.6	90.4	90.5	89.9	0.77	2.4	5.0	2.5	0.0370	61.0
160M	11	15	1465	71.7	21.7	91.4	91.5	90.6	0.80	2.4	5.8	2.5	0.0680	89.0
160L	15	20	1470	97.4	29.9	92.1	92.3	91.7	0.81	2.6	6	2.6	0.0870	105.0
180M	18.5	25	1465	120.6	33.9	92.6	92.4	91.8	0.85	2.5	6	2.5	0.1730	142.0
180L	22	30	1470	142.9	39.2	93.0	92.9	92.0	0.87	2.2	6	2.6	0.1870	165.0

six poles

6 POLES Volt 400/50 Hz (1000 rpm) - IE3 Premium Efficiency

Frame size IEC	Rated Output kW	Rated Output Hp	n rpm	Tn Torque Nm	In (400V) A	Eff η 100%	Eff η 75%	Eff η 50%	Cosφ	Tstart/Tn	Istart/In	Tmax/Tn	J kgm²	Weight kg
90S	0.75	1	932	7.7	2.1	78.9	79.1	78.2	0.65	2,2,8	4.0	2.7	0.0050	14.5
90L	1.1	1.5	940	11.2	3.0	81.0	81.1	79.2	0.66	2.1	5.2	3.0	0.0070	19.5
100M	1.5	2	945	15.2	3.9	82.5	82.4	81.3	0.68	2.2	4.7	2.5	0.0078	23.0
112M	2.2	3	955	22.0	5.6	84.3	84.5	83.4	0.67	2.2	5	2.6	0.0132	29.0
132S	3	4	940	30.5	7.0	85.6	85.7	84.2	0.73	2.3	4.8	2.8	0.0295	42.0
132S	4	5.5	950	40.2	9.2	86.8	87.0	85.4	0.72	2.4	5.4	2.9	0.0381	48.0
132M	5.5	7.5	952	55.2	12.4	88.0	88.1	87.2	0.73	2.6	6.0	3.0	0.0510	66.0
160M	7.5	10	970	73.8	15.8	89.1	89.0	88.3	0.77	2.6	4.7	3.0	0.0950	95.0
160L	11	15	972	108.1	23.1	90.3	91.4	89.2	0.76	2.6	4.6	3.0	0.1540	115.0
180M	15	20	975	146.9	30.1	91.2	91.4	91.0	0.79	2.7	4.5	3.1	0.1910	146.0
180L	18.5	25	978	180.6	35.5	91.7	91.8	90.8	0.82	2.5	4.8	2.8	0.1980	190.0

*POWERS NOT INCLUDED FOR THE UNIFIED SERIES.

WE RESERVE THE RIGHT TO CHANGE THE DATA ALSO WITHOUT NOTICE. Rev. 0-2013

B3 single phase

DIMENSIONS B3 SINGLE PHASE (mm)

TIPO	A	AB	AC	B	C	D(Ø)	MM	E	F(h9)	GA	H	LB	K	Pg	HD	V
56	90	108	113	71	36	9j6	M3	20	4	10.2	56	170	6	11	147	18
63	100	120	124	80	40	11j6	M4	23	4	12.5	63	183	7	11	175	23
71	112	134	142	90	45	14j6	M5	30	5	16	71	215	7	11	191	27,5
80	125	152	158	100	50	19j6	M6	40	6	21.5	80	240	9	13,5	225	25
90S	140	170	178	100	56	24j6	M8	50	8	27	90	255	9	13,5	245	29,5
90L	140	170	178	125	56	24j6	M8	50	8	27	90	280	9	13,5	245	29,5
100	160	192	194	140	63	28j6	M10	60	8	31	100	305	11	13,5	273	20,5
112(*)	190	220	220	140	70	28j6	M10	60	8	31	112	332	11	13,5	265	46
132S(*)	216	268	262	178	89	38k6	M12	80	10	41	132	382	11	21	300	54,5
132M(*)	216	268	262	178	89	38k6	M12	80	10	41	132	420	11	21	300	54,5

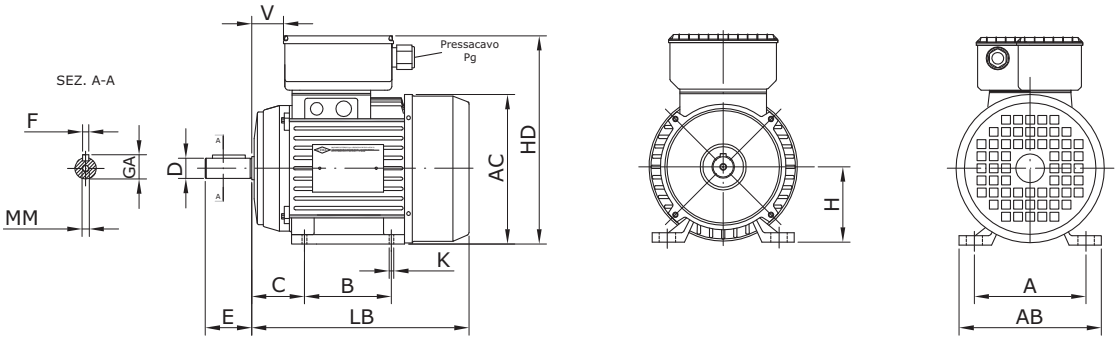

*WITHOUT CAPACITOR BOX, THE CAPACITOR IS OUTSIDE.

WE RESERVE THE RIGHT TO CHANGE THE DATA WITHOUT PRIOR NOTICE. Rev. 1-2013

B3 three phase

DIMENSIONS B3 THREE PHASE (mm)

TIPO	A	AB	AC	B	C	D(Ø)	MM	E	F(h9)	GA	KK	LB	HD	K	H	V
56	90	108	113	71	36	9j6	M3	20	3	10.2	M16	170	147	6	56	19
63	100	120	124	80	40	11j6	M4	23	4	12.5	M16	183	155	7	63	22.5
71	112	134	142	90	45	14j6	M5	30	5	16	M20	215	171	7	71	26.5
80	125	152	158	100	50	19j6	M6	40	6	21.5	M20	240	200	9	80	33.5
90S	140	170	178	100	56	24j6	M8	50	8	27	M20	255	216	9	90	29.5
90L	140	170	178	125	56	24j6	M8	50	8	27	M20	280	216	9	90	29.5
100	160	192	194	140	63	28j6	M10	60	8	31	M20	305	238	11	100	38
112	190	220	220	140	70	28j6	M10	60	8	31	M25	332	267	11	112	46
132S	216	268	262	140	89	38k6	M12	80	10	41	M25	382	300	11	132	45.5
132M	216	268	262	178	89	38k6	M12	80	10	41	M25	420	300	11	132	45.5
160M	254	320	310	210	120	42k6	M16	110	12	45	M32	497	380	15	160	61
160L	254	320	310	254	120	42k6	M16	110	12	45	M32	546	380	15	160	61
180M	270	355	356	241	121	48k6	M16	110	14	51.5	M40	586	420	15	180	80
180L	270	355	356	279	121	48k6	M16	110	14	51.5	M40	626	420	15	180	80
200	318	400	356	305	133	55k6	M20	110	16	59	M40	626	440	19	200	80

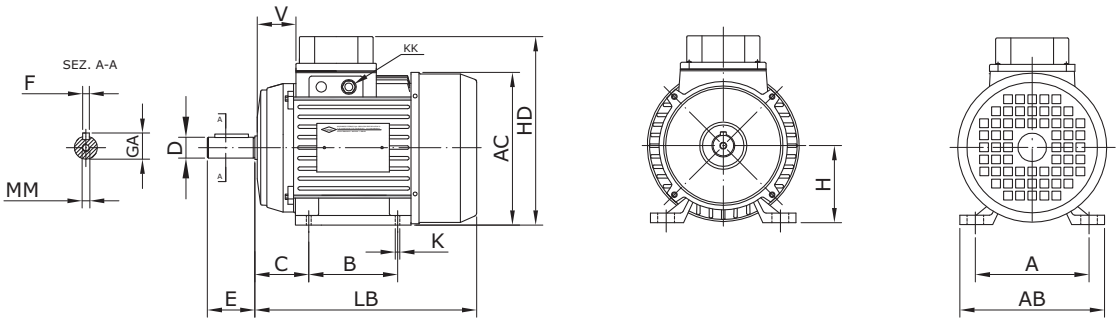

WE RESERVE THE RIGHT TO CHANGE THE DATA WITHOUT PRIOR NOTICE. Rev. 1-2013

B5 single phase

DIMENSIONS B5 SINGLE PHASE (mm)

TIPO	AD	AC	D(Ø)	MM	E	LA	M(Ø)	N(Ø)	P(Ø)	S(Ø)	T	F(h9)	GA	LB	HD	Pg	V
56	85	113	9j6	M3	20	8.5	100	80	120	7	2.5	3	10.2	170	139	11	8.5
63	125	124	11j6	M4	23	7.5	115	95	140	9	3	4	12.5	183	154	11	15.5
71R	133	142	11j6	M4	23	9	115	95	140	9	3	4	12.5	215	172	11	21
71	133	142	14j6	M5	30	9	130	110	160	9	3.5	5	16.0	215	172	11	21
80R	140	158	14j6	M5	30	9	130	110	160	9	3.5	5	16	240	220	13.5	21
80	140	158	19j6	M6	40	8.5	165	130	200	11.5	3.5	6	21.5	240	220	13.5	19
90R	147	178	19j6	M6	40	10	130	110	160	11.5	3.5	6	21.5	255	237	13.5	21
90S	147	178	24j6	M8	50	10	165	130	200	11.5	3.5	8	27	255	237	13.5	21
90L	147	178	24j6	M8	50	10	165	130	200	11.5	3.5	8	27	280	237	13.5	21
100R	170	194	24j6	M8	50	10	165	130	200	11.5	3.5	8	27	305	267	13.5	10.5
100	170	194	28j6	M10	60	10.5	215	180	250	14	4	8	31	305	267	13.5	10.5
112(*)	149	220	28j6	M10	60	11	215	180	250	14	4	8	31	332	261	13.5	20
132S(*)	168	262	38 k6	M12	80	16	265	230	300	14	4	10	41	382	296	21	54.5
132M(*)	168	262	38 k6	M12	80	16	265	230	300	14	4	10	41	420	296	21	54.5

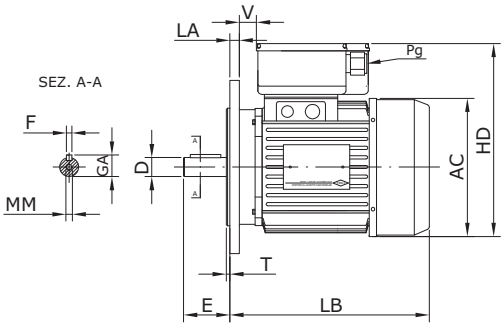

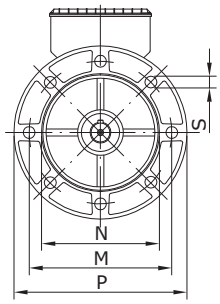

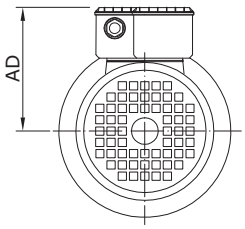

*WITHOUT CAPACITOR BOX, THE CAPACITOR IS OUTSIDE.

WE RESERVE THE RIGHT TO CHANGE THE DATA WITHOUT PRIOR NOTICE. Rev. 1-2013

B5 three phase

DIMENSIONS B5 THREE PHASE (mm)

TIPO	AD	AC	D(Ø)	MM	E	M(Ø)	N(Ø)	P(Ø)	S(Ø)	T	F(h9)	GA	KK	LB	HD	LA	V
56	91	108	9j6	M3	20	100	80	120	7	2.5	3	10.2	M16	170	147	8.5	11.5
63	92	124	11j6	M4	23	115	95	140	9	3	4	12.5	M16	183	155	7.5	21.5
71R	100	142	11j6	M4	23	115	95	140	9	3	4	12.5	M20	215	171	7.5	26.5
71	100	142	14j6	M5	30	130	110	160	9	3.5	5	16	M20	215	171	9	26.5
80R	120	158	14j6	M5	30	130	110	160	9	3.5	5	16	M20	240	200	9	27
80	120	158	19j6	M6	40	165	130	200	11.5	3.5	6	21.5	M20	240	200	8.5	27
90R	126	178	19j6	M6	40	130	110	160	9	3.5	6	21.5	M20	255	216	10	31
90S	126	178	24j6	M8	50	165	130	200	11.5	3.5	8	27	M20	255	216	10	31
90L	126	178	24j6	M8	50	165	130	200	11.5	3.5	8	27	M20	280	216	10	31
100R	138	194	24j6	M8	50	165	130	200	11.5	3.5	8	27	M20	305	238	10	37
100	138	194	28j6	M10	60	215	180	250	14	4	8	31	M20	305	238	10.5	37
112	155	220	28j6	M10	60	215	180	250	14	4	8	31	M25	332	267	11	37
132S	168	262	38k6	M12	80	265	230	300	14	4	10	41	M25	382	300	14.5	42
132M	168	262	38k6	M12	80	265	230	300	14	4	10	41	M25	420	300	14.5	42
160M	233	309	42k6	M16	110	300	250	350	18	5	12	45	M32	497	380	14	60
160L	233	309	42k6	M16	110	300	250	350	18	5	12	45	M32	541	380	14	60
180M	253	350	48k6	M16	110	300	250	350	19	5	14	51.5	M40	586	417	20	54
180L	253	350	48k6	M16	110	300	250	350	19	5	14	51.5	M40	626	417	20	54
200	253	350	55k6	M20	110	350	300	400	19	5	16	59	M40	626	417	20	54

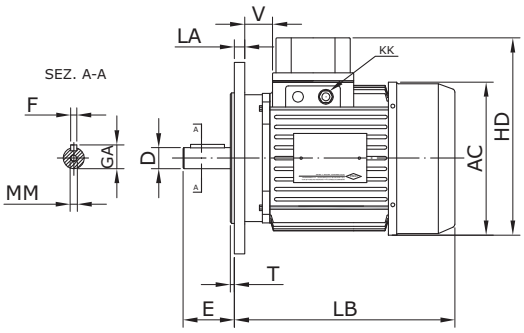

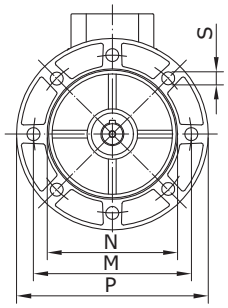

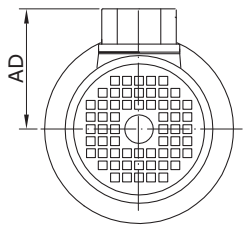

WE RESERVE THE RIGHT TO CHANGE THE DATA WITHOUT PRIOR NOTICE. Rev. 1-2013

B14 single phase

DIMENSIONS B14 SINGLE PHASE (mm)

TIPO	AD	AC	D(Ø)	MM	E	M(Ø)	N(Ø)	P(Ø)	S(Ø)	T	F(h9)	GA	LB	Pg	HD	V
56	85	113	9j6	M3	20	65	50	80	M5	2.5	3	10.2	170	11	139	17
63	125	124	11j6	M4	23	75	60	90	M5	2.5	4	12.5	183	11	154	21.5
71	133	142	14j6	M5	30	85	70	105	M6	2.5	5	16	215	11	172	30
80	140	158	19j6	M6	40	100	80	120	M6	3	6	21.5	240	13.5	220	27.5
90S	147	178	24j6	M8	50	115	95	140	M8	3	8	27	255	13.5	237	31
90L	147	178	24j6	M8	50	115	95	140	M8	3	8	27	280	13.5	237	31
100	170	194	28j6	M10	60	130	110	160	M8	3.5	8	31	305	13.5	267	21
112(*)	/	220	28j6	M10	60	130	110	160	M8	3.5	8	31	332	13.5	261	20
132S(*)	/	262	38k6	M12	80	165	130	200	M10	3.5	10	41	382	21	296	54
132M(*)	/	262	38k6	M12	80	165	130	200	M10	3.5	10	41	420	21	296	54

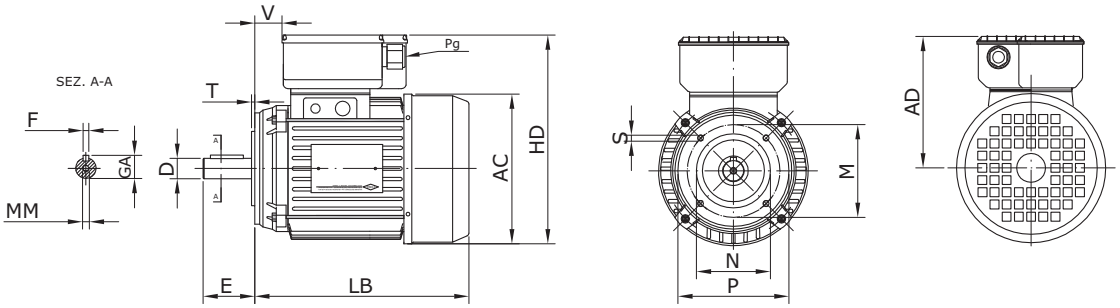

*WITHOUT CAPACITOR BOX, THE CAPACITOR IS OUTSIDE.

WE RESERVE THE RIGHT TO CHANGE THE DATA WITHOUT PRIOR NOTICE. Rev. 1-2013

B14 three phase

DIMENSIONS B14 THREE PHASE (mm)

TIPO	AD	AC	D(Ø)	MM	E	M(Ø)	N(Ø)	P(Ø)	S(Ø)	T	F(h9)	GA	KK	LB	HD	V
56	91	108	9J6	M3	20	65	50	80	M5	2.5	3	10.2	M16	170	147	23.5
63	92	124	11j6	M4	23	75	60	90	M5	2.5	4	12.5	M16	183	155	24
71	100	142	14j6	M5	30	85	70	105	M6	2.5	5	16	M20	215	171	27
80	120	158	19j6	M6	40	100	80	120	M6	3	6	21.5	M20	240	200	33.5
90S	126	178	24j6	M8	50	115	95	140	M8	3	8	27	M20	255	216	35
90L	126	178	24j6	M8	50	115	95	140	M8	3	8	27	M20	280	216	39.5
100	138	194	28j6	M10	60	130	110	160	M8	3.5	8	31	M20	305	238	39.5
112	155	220	28j6	M10	60	130	110	160	M8	3.5	8	31	M25	332	267	46
132S	168	262	38k6	M12	80	165	130	200	M10	3.5	10	41	M25	382	300	47.5
132M	168	262	38k6	M12	80	165	130	200	M10	3.5	10	41	M25	420	300	54.5
160M	233	309	42k6	M16	110	215	180	250	M12	5	12	45	M32	497	380	72
160L	233	309	42k6	M16	110	215	180	250	M12	5	12	45	M32	541	380	72
180M	253	350	48k6	M16	110	/	/	/	/	/	14	51.5	M40	586	417	74
180L	253	350	48k8	M16	110	/	/	/	/	/	14	51.5	M40	626	417	74
200	253	350	55k6	M20	110	/	/	/	/	/	16	59	M40	626	417	74

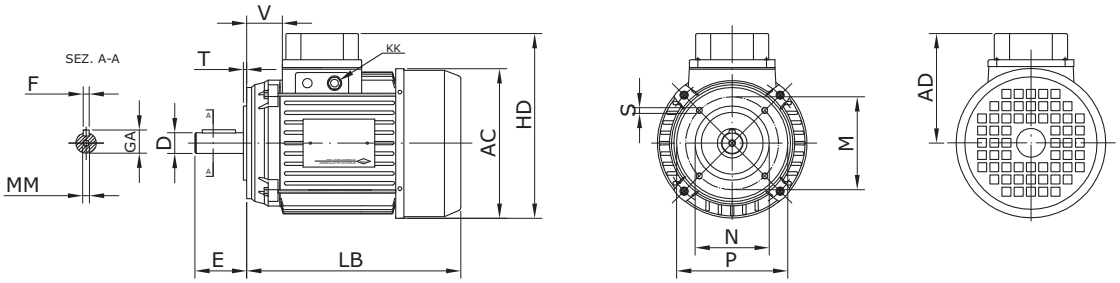

WE RESERVE THE RIGHT TO CHANGE THE DATA WITHOUT PRIOR NOTICE. Rev. 1-2013

B3-B5 single phase

DIMENSIONS B3-B5 SINGLE PHASE (mm)

TIPO	A	AB	AD	AC	B	C	D(Ø)	H	MM	E	M(Ø)	N(Ø)	P(Ø)	S(Ø)	F(h9)	GA	K	Pg	LB	T	LA	V
56	90	108	85	113	71	36	9j6	56	M3	20	100	80	120	7	3	10.2	6	11	170	2.5	8.5	8.5
63	100	120	125	124	80	40	11j6	63	M4	23	115	95	140	9	4	12.5	7	11	183	3	7.5	15.5
71R	112	134	133	142	90	45	11j6	71	M4	23	115	95	140	9	4	12.5	7	11	215	3	9	21
71	112	134	133	142	90	45	14j6	71	M5	30	130	110	160	9	5	16	7	11	215	3.5	9	21
80R	125	152	140	158	100	50	14j6	80	M5	30	130	110	160	9	5	16	9	13.5	240	3.5	9	19
80	125	152	140	158	100	50	19j6	80	M6	40	165	130	200	11.5	6	21.5	9	13.5	240	3.5	8.5	19
90R	140	170	147	178	100	56	19j6	90	M6	40	130	110	160	9	6	21.5	9	13.5	255	3.5	10	21
90S	140	170	147	178	100	56	24j6	90	M8	50	165	130	200	11.5	8	27	9	13.5	255	3.5	10	21
90L	140	170	147	178	125	56	24j6	90	M8	50	165	130	200	11.5	8	27	9	13.5	280	3.5	10	25
100R	160	192	170	194	140	63	24j6	100	M8	50	165	130	200	11.5	8	27	11	13.5	305	3.5	10.5	15
100	160	192	170	194	140	63	28j6	100	M10	60	215	180	250	14	8	31	11	13.5	305	4	10.5	15
112*	190	220	/	220	140	70	28j6	112	M10	60	215	180	250	14	8	31	11	13.5	332	4	11	/
132S*	216	268	/	262	140	89	38k6	132	M12	80	265	230	300	14	10	41	11	21	382	4	14.5	/
132M*	216	268	/	262	178	89	38k6	132	M12	80	265	230	300	14	10	41	11	21	420	4	14.5	/

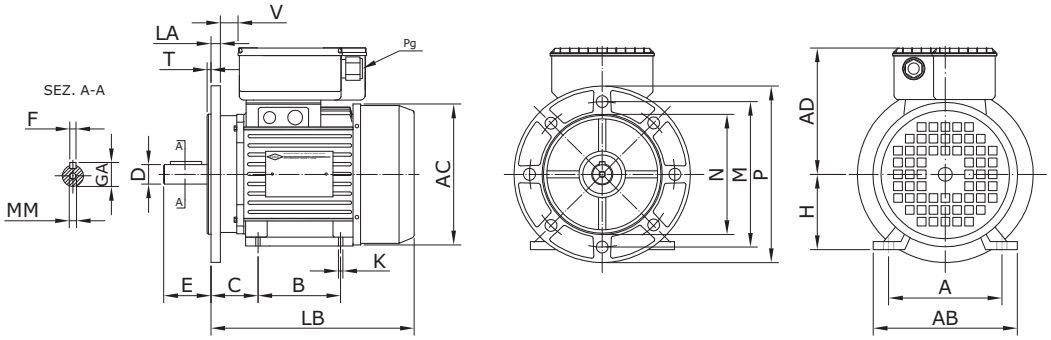

*WITHOUT CAPACITOR BOX, THE CAPACITOR IS OUTSIDE.

WE RESERVE THE RIGHT TO CHANGE THE DATA WITHOUT PRIOR NOTICE. Rev. 1-2013

B3-B5 three phase

DIMENSIONS B3-B5 THREE PHASE (mm)

TIPO	A	AB	AD	AC	B	C	D(Ø)	H	MM	E	M(Ø)	N(Ø)	P(Ø)	S(Ø)	F(h9)	GA	K	KK	LB	T	LA	V
56	90	108	91	113	71	36	9j6	56	M3	20	100	80	120	7	3	10.2	6	M16	170	2.5	8.5	11.5
63	100	120	92	124	80	40	11j6	63	M4	23	115	95	140	9	4	12.5	7	M16	183	3	7.5	21.5
71R	112	134	100	142	90	45	11j6	71	M4	23	115	95	140	9	4	12.5	7	M20	215	3	9	26.5
71	112	134	100	142	90	45	14j6	71	M5	30	130	110	160	9	5	16	7	M20	215	3.5	9	26.5
80R	125	152	120	158	100	50	14j6	80	M5	30	130	110	160	9	5	16	9	M20	240	3.5	8.5	27
80	125	152	120	158	100	50	19j6	80	M6	40	165	130	200	11.5	6	21.5	9	M20	240	3.5	8.5	27
90R	140	170	126	178	100	56	19j6	90	M6	40	130	110	160	9	6	21.5	9	M20	255	3.5	10	31
90S	140	170	126	178	100	56	24j6	90	M8	50	165	130	200	11.5	8	27	9	M20	255	3.5	10	31
90L	140	170	126	178	125	56	24j6	90	M8	50	165	130	200	11.5	8	27	9	M20	280	3.5	10	31
100R	160	192	138	194	140	63	24j6	100	M8	50	165	130	200	11.5	8	27	11	M20	305	3.5	10.5	37
100	160	192	138	194	140	63	28j6	100	M10	60	215	180	250	14	8	31	11	M20	305	4	10.5	37
112	190	220	155	220	140	70	28j6	112	M10	60	215	180	250	14	8	31	11	M25	332	4	11	37.5
132S	216	268	168	262	140	89	38k6	132	M12	80	265	230	300	14	10	41	11	M25	382	4	14.5	42
132M	216	268	168	262	178	89	38k6	132	M12	80	265	230	300	14	10	41	11	M25	420	4	14.5	42
160M	254	320	233	310	210	120	42k6	160	M16	110	300	250	350	18	12	45	15	M32	497	5	14	60
160L	254	320	233	310	254	120	42k6	160	M16	110	300	250	350	18	12	45	15	M32	546	5	14	60
180M	270	355	253	356	241	121	48k6	180	M16	110	300	250	350	19	14	51.5	15	M40	586	5	20	54
180L	270	355	253	356	279	121	48k6	180	M16	110	300	250	350	19	14	51.5	15	M40	626	5	20	54
200	318	400	253	356	279	133	55k6	200	M20	110	350	300	400	19	16	59	19	M40	626	5	20	54

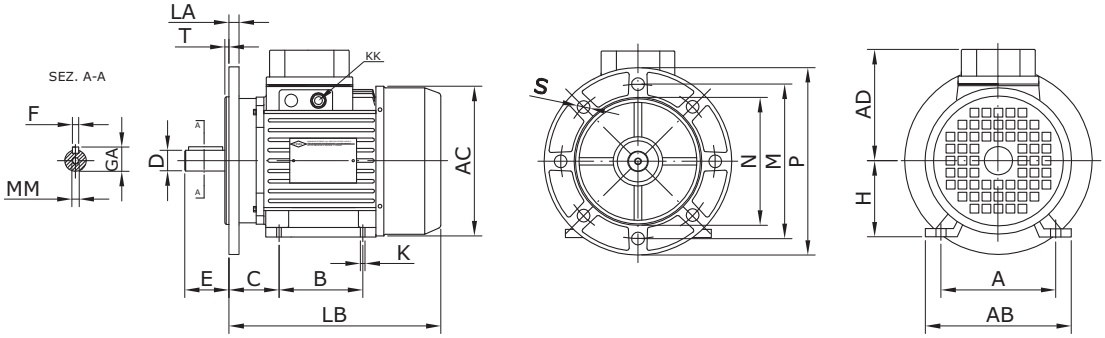

WE RESERVE THE RIGHT TO CHANGE THE DATA WITHOUT PRIOR NOTICE. Rev. 1-2013

B3-B14 single phase

DIMENSIONS B3-B14 SINGLE PHASE (mm)

TIPO	A	AB	AD	AC	B	C	D(Ø)	H	MM	E	M(Ø)	N(Ø)	P(Ø)	S(Ø)	T	F(h9)	GA	K	Pg	LB	HD	V
56	90	108	85	113	71	36	9j6	56	M3	20	65	50	80	M 5	2.5	3	10.2	6	11	170	139	17
63	100	120	125	124	80	40	11j6	63	M4	23	75	60	90	M 5	2.5	4	12.5	7	11	183	154	21.5
71	112	134	133	142	90	45	14j6	71	M5	30	85	70	105	M 6	2.5	5	16	7	11	215	172	30
80	125	152	140	158	100	50	19j6	80	M6	40	100	80	120	M 6	3	6	21.5	9	13.5	240	220	27.5
90S	140	170	147	178	100	56	24j6	90	M8	50	115	95	140	M 8	3	8	27	9	13.5	255	237	31
90L	140	170	147	178	125	56	24j6	90	M8	50	115	95	140	M 8	3	8	27	9	13.5	280	237	31
100	160	192	170	194	140	63	28j6	100	M10	60	130	110	160	M 8	3.5	8	31	11	13.5	305	267	21
112*	190	220	/	220	140	70	28j6	112	M10	60	130	110	160	M 8	3.5	8	31	11	13.5	332	261	/
132S*	216	268	/	262	140	89	38k6	132	M12	80	165	130	200	M10	3.5	10	41	11	21	382	300	45.5
132M*	216	268	/	262	178	89	38k6	132	M12	80	165	130	200	M10	3.5	10	41	11	21	420	300	45.5

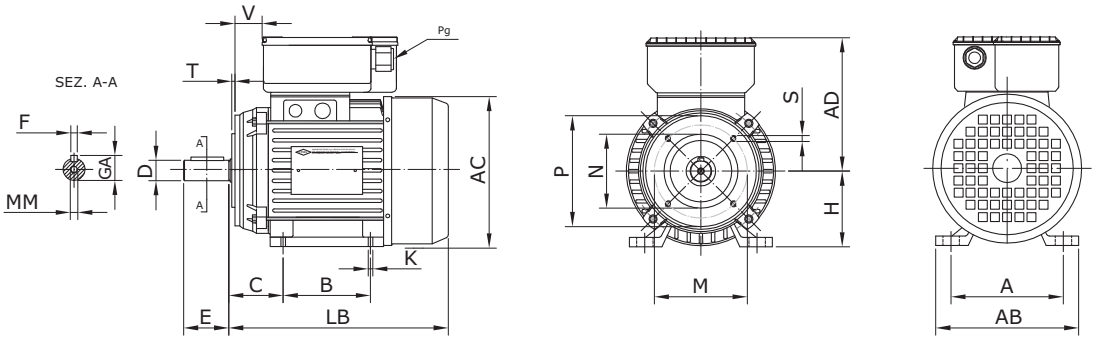

*WITHOUT CAPACITOR BOX, THE CAPACITOR IS OUTSIDE.

WE RESERVE THE RIGHT TO CHANGE THE DATA WITHOUT PRIOR NOTICE. Rev. 1-2013

B3-B14 three phase

DIMENSIONS B3-B14 THREE PHASE (mm)

TIPO	A	AB	AD	AC	B	C	D(Ø)	H	MM	E	M(Ø)	N(Ø)	P(Ø)	S(Ø)	T	F(h9)	GA	K	KK	LB	HD	V
56	90	108	91	113	71	36	9j6	56	M3	20	65	50	80	M 5	2.5	3	10.2	6	M16	170	147	23.5
63	100	120	92	124	80	40	11j6	63	M4	23	75	60	90	M 5	2.5	4	12.5	7	M16	183	155	24
71	112	134	100	142	90	45	14j6	71	M5	30	85	70	105	M 6	2.5	5	16	7	M20	215	171	27
80	125	152	120	158	100	50	19j6	80	M6	40	100	80	120	M 6	3	6	21.5	9	M20	240	200	33.5
90S	140	170	126	178	100	56	24j6	90	M8	50	115	95	140	M 8	3	8	27	9	M20	255	216	35
90L	140	170	126	178	125	56	24j6	90	M8	50	115	95	140	M 8	3	8	27	9	M20	280	216	39.5
100	160	192	138	194	140	63	28j6	100	M10	60	130	110	160	M 8	3.5	8	31	11	M20	305	238	39.5
112	190	220	155	220	140	70	28j6	112	M10	60	130	110	160	M 8	3.5	8	31	11	M25	332	267	46
132S	216	268	168	262	140	89	38k6	132	M12	80	165	130	200	M 10	3.5	10	41	11	M25	382	300	47.3
132M	216	268	168	262	178	89	38k6	132	M12	80	165	130	200	M 10	3.5	10	41	11	M25	420	300	54.5
160M	254	320	233	310	210	120	42k6	160	M16	110	215	180	250	M12	5	12	45	15	M32	497	393	72
160L	254	320	233	310	254	120	42k6	160	M16	110	215	180	250	M12	5	12	45	15	M32	541	393	72
180M	270	355	253	356	241	121	48k6	180	M16	110	/	/	/	/	/	14	51.5	15	M40	586	433	74
180L	270	355	253	356	279	121	48k6	180	M16	110	/	/	/	/	/	14	51.5	15	M40	626	433	74
200	270	355	253	356	279	121	55k6	200	M20	110	/	/	/	/	/	16	59	15	M40	626	433	74

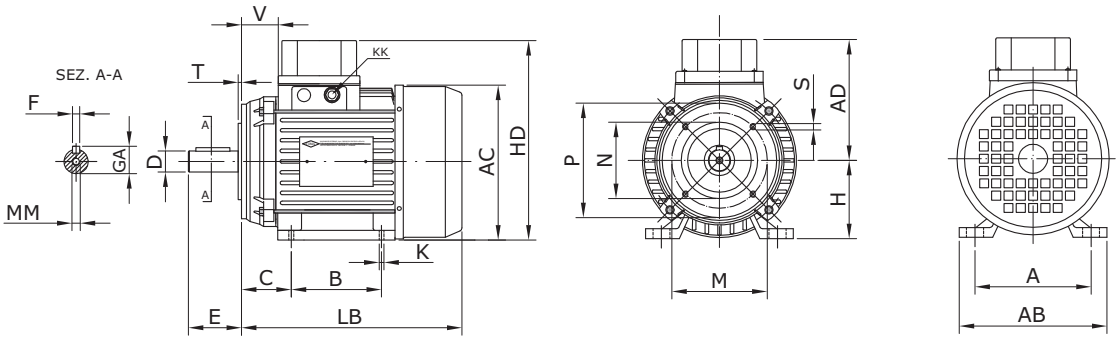

WE RESERVE THE RIGHT TO CHANGE THE DATA WITHOUT PRIOR NOTICE. Rev. 1-2013

HOLLOW SHAFT					DIMENSIONS B3-B14 THREE PHASE (mm)														
TIPO	A	AB	AC	S (Ø)	B	C	R	CH	LB	Z	Q	PA	PB	PC	PD	PE	T	H	HD
100	160	192	194	7.5	140	60	10	8	301.5	140	236	24	37.5	60	90	75.5	70	100	194
112	190	220	220	9	140	68	4.5	8	328.5	153	260	24	38	45.5	61	87	95	112	220
132S	216	268	262	9	140	86	7	8	378.5	182	305	24	50	60	61	87	95	132	260
132M	216	268	262	9	178	86	7	8	416.5	182	305	24	50	60	61	87	95	132	260

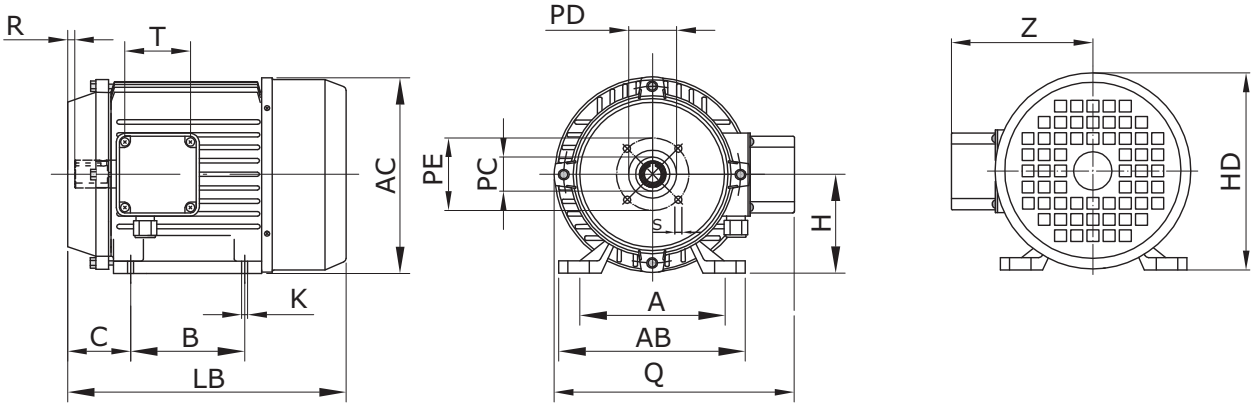

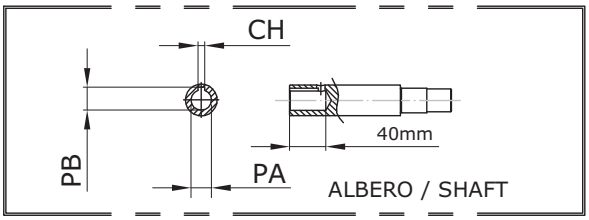

WE RESERVE THE RIGHT TO CHANGE THE DATA WITHOUT PRIOR NOTICE. Rev. 1-2013